User Guide

S-3 Reference

SUPER AUDIO CD PLAYER

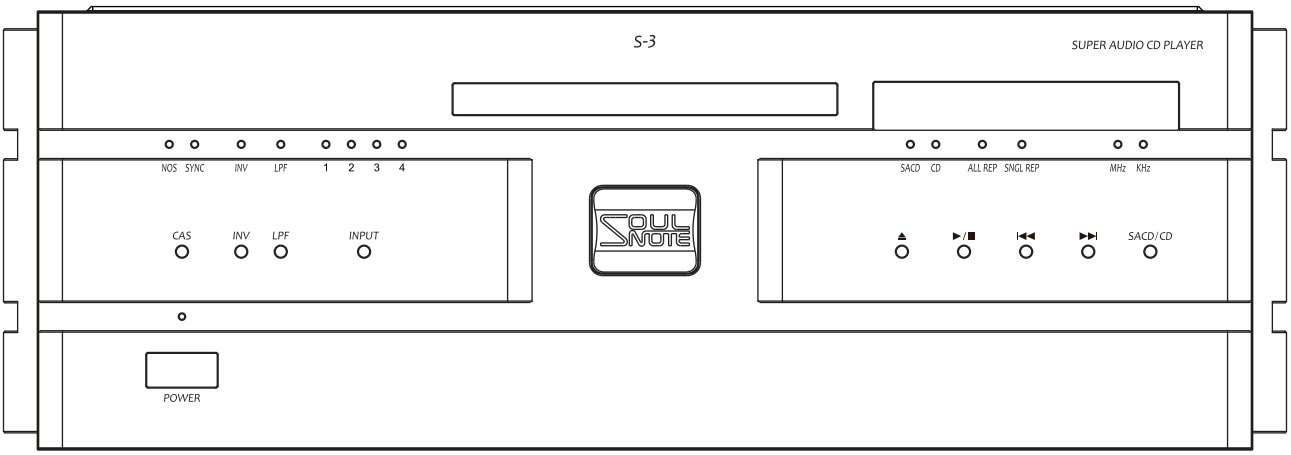

Table of Contents

Safety Precautions.....3
About Disc 6
Insert Disc.....7
Front Panel Names and Functions 8
Rear Panel Names and Functions.....10
Remote Control Button Names and Functions 12
Operation 13
Remote Control.....15
DISPLAY button.....16
Balanced Input/Output.....16
Attaching the Spike Pins.....16
Troubleshooting 17
Maintenance 17
Specifications.....18

Supplied Accessories

- User Guide (this manual) 1
- Power cable 2
- Spike-receiving board 1
- Spike pin 3
- Remote control.....1

Safety Precautions

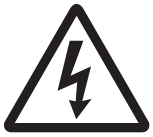

CAUTION

RISK OF ELECTRIC SHOCK
DO NOT OPEN

CAUTION: TO REDUCE THE RISK OF ELECTRIC SHOCK, DO NOT REMOVE COVER (OR BACK). NO USER-SERVICEABLE PARTS INSIDE. REFER SERVICING TO QUALIFIED SERVICE PERSONNEL.

The lightning flash with arrowhead symbol, within an equilateral triangle, is intended to alert the user to the presence of uninsulated "dangerous voltage" within the product's enclosure that may be of sufficient magnitude to constitute a risk of electric shock to persons.

The exclamation point within an equilateral triangle is intended to alert the user to the presence of important operating and maintenance (servicing) instructions in the literature accompanying the product.

WARNING

TO REDUCE THE RISK OF FIRE OR ELECTRIC SHOCK, DO NOT EXPOSE THIS APPLIANCE TO RAIN OR MOISTURE.

A warning that an apparatus with CLASS I construction shall be connected to a MAINS socket outlet with a protective earthing connection.

IMPORTANT SAFETY INSTRUCTIONS

READ BEFORE OPERATING EQUIPMENT

This product was designed and manufactured to meet strict quality and safety standards.
There are, however, some installation and operation precautions which you should be particularly aware of.

1. Read these instructions.
2. Keep these instructions.
3. Heed all warnings.
4. Follow all instructions.
5. Do not use this apparatus near water.
6. Clean only with dry cloth.
7. Do not block any ventilation openings.
   Install in accordance with the manufacturer's instructions.
8. Do not install near any heat sources such as radiators, heat registers, stoves, or other apparatus (including amplifiers) that produce heat.
9. Protect the power cord from being walked on or pinched particularly at plugs, convenience receptacles, and the point where they exit from the apparatus.
10. Only use attachments/accessories specified by the manufacturer.
11. Use only with the cart, stand, tripod, bracket, or table specified by the manufacturer, or sold with the apparatus. When a cart is used, use caution when moving the cart/apparatus combination to avoid injury from tip-over.

12. Unplug this apparatus during lightning storms or when unused for long periods of time.
13. Refer all servicing to qualified service personnel. Servicing is required when the apparatus has been damaged in any way, such as power-supply cord or plug is damaged, liquid has been spilled or objects have fallen into the apparatus, the apparatus has been exposed to rain or moisture, does not operate normally, or has been dropped.
14. Batteries shall not be exposed to excessive heat such as sunshine, fire or the like.

CAUTION:

- To completely disconnect this product from the mains, disconnect the plug from the wall socket outlet.
  The mains plug is used to completely interrupt the power supply to the unit and must be within easy access by the user.
- Never use the unit with any other cord except the supplied power cord.

NOTE ON USE

WARNINGS

- Avoid high temperatures.
  Allow for sufficient heat dispersion when installed in a rack.
- Handle the power cord carefully.
  Hold the plug when unplugging the cord.
- Keep the unit free from moisture, water, and dust.
- Unplug the power cord when not using the unit for long periods of time.
- Do not obstruct the ventilation holes.
- Do not let foreign objects into the unit.
- Do not let insecticides, benzene, and thinner come in contact with the unit.
- Never disassemble or modify the unit in any way.
- Ventilation should not be impeded by covering the ventilation openings with items, such as newspapers, tablecloths or curtains.
- Naked flame sources such as lighted candles should not be placed on the unit.
- Observe and follow local regulations regarding battery disposal.
- Do not expose the unit to dripping or splashing fluids.
- Do not place objects filled with liquids, such as vases, on the unit.
- Do not handle the mains cord with wet hands.
- When the switch is in the OFF position, the equipment is not completely switched off from MAINS.
- The equipment shall be installed near the power supply so that the power supply is easily accessible.

DECLARATION OF CONFORMITY
We declare under our sole responsibility that this product, to which this declaration relates, is in conformity with the following standards:
EN60065, EN55032, EN55020.
Following the provisions of Low Voltage Directive 2014/35/EU and EMC Directive 2014/30/EU.

A NOTE ABOUT RECYCLING:
This product's packaging materials are recyclable and can be reused. Please dispose of any materials in accordance with the local recycling regulations. When discarding the unit, comply with local rules or regulations.
Batteries should never be thrown away or incinerated but disposed of in accordance with the local regulations concerning battery disposal. This product and the supplied accessories, excluding the batteries, constitute the applicable product according to the WEEE directive.

CAUTIONS ON INSTALLATION

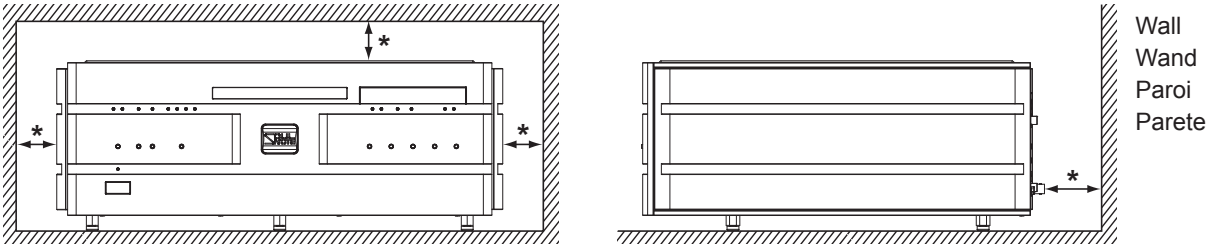

*** For proper heat dispersal, do not install this unit in a confined space, such as a bookcase or similar enclosure.**

- Leave sufficient clearance (at least 10 cm) from the wall, (at least 5 cm) from top surface of the unit.
- Do not place any other equipment on this unit.

About Disc

1. Available Compact Disc

This equipment can playback the following discs that is recorded in accordance with super audio CD and music CD specification: CD, CD-R and CD-RW.

The available CD has printed with authorized marking.
The other compressed data, such as mp3/WMA cannot play.

Note: in case of CD-R/CD-RW, these sometimes are not able to do playback due to recorded conditions.

2. Copy Controlled CD

This equipment is designed for music CD, the operation or performance cannot be guaranteed for non-standard discs. Regarding the Copy Controlled CD, please ask to selling agency.

3. Notice for Insertion Disc

- Please do not insert a Disc that has non-standard shape.

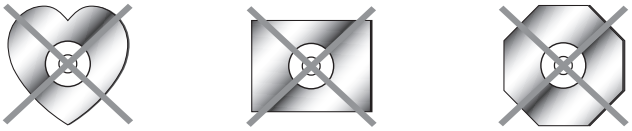

- Please do not use two-ply Discs, or do not use a disc with stacked something.
- Please do not use a Disc that is affixed something, or do not use a disc dirty with the seal etc.

- Please do not use a Disc with a lot of scuffs or dirt.

To use these discs, it might become a cause that inserted disc could not take out, inserted disc might be broken, or this equipment might be damaged.

4. Cautions for Operation of Disc

Please treat carefully not to give a crack, a fingerprint or dirt to the record side of CD.
Please do not wipe CD by cleanser or alcohol. There is a possibility of deteriorating as Disc.
Please put CD into a case after using to prevent a crack, dust and/or distortion.

5. Caution for Storage a Disc

Please do not store the CDs where under sun shine, near the heating devices, in the high humidity or in the dusty.

Insert Disc

1. Open / Close Disc Tray

1) Power On the main unit.
   * The Track Display will be indicated "00" if the CD is not inserted.

2) Press Open/Close button.

Note:
Please power on the main unit when insert a Disc.

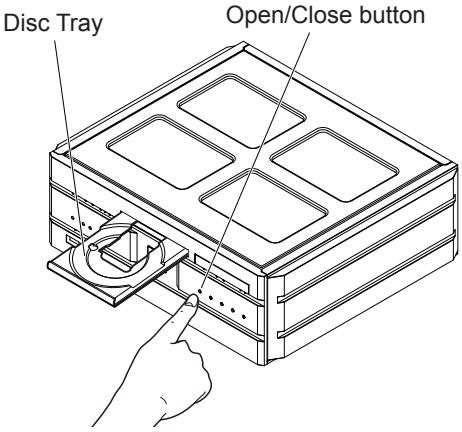

2. How to insert Disc

- Take a Disc not to touch surface of data side, then insert Disc with label up.
- Insert a Disc when the disc tray fully opened.
- Put the disc on the tray with adapting outside tray guide for 12 cm disc (Figure1), and adapting inside tray guide for 8 cm disc (Figure2).
- The Disc will automatically be inserted by press Open/Close button.
- Number of tracks and total time will be displayed after disc insertion.

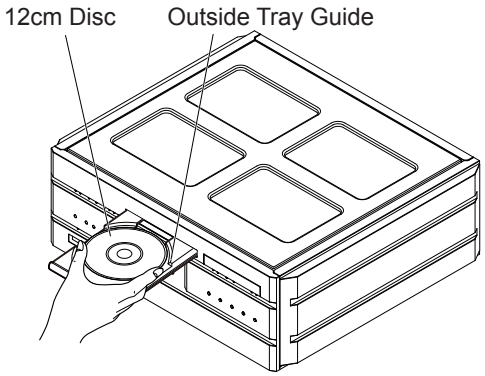

Figure 1

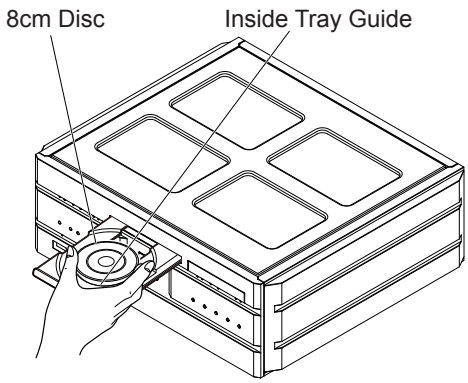

Figure 2

Note:

When an SACD is inserted, "00" will flash and the TOC in the SACD layer will be read causing the SACD indicator to light up.
When a CD is inserted, "0" will flash and the clock in the mechanism will be switched.
While "0" is flashing, none of the button and remote control operations are available because a power sequence is executed in the mechanism.
After the power sequence is completed, "00" will flash and the TOC in the CD layer will be read.

Front Panel Names and Functions

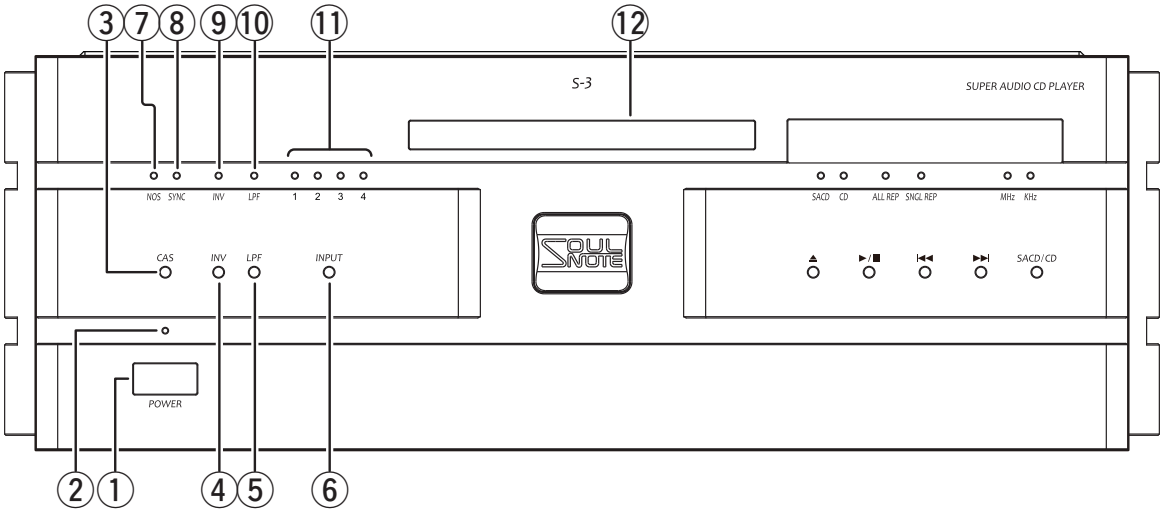

① Power Switch (POWER)

Press to turn on the power, and press again to turn off.

② Power Indicator (POWER)

When the power is turned on, the indicator is lit red.

Note:

- When in external clock mode, the indicator is lit blue.

③ CAS switch

Press to change playback mode. Pressing this switch toggles between NOS and FIR.

Note:

- When USB is selected and when a SACD disc is inserted, the playback mode cannot be changed.

④ Invert Switch (INV)

Press to set the analog output phase to the inverted phase. Press again to set it back to the original setting.

⑤ Low-path Filter Switch (LPF)

Press to turn on the analog low-path filter that attenuates signals by 8 dB at 100 kHz. Press again to turn it off.

Notes:

- This switch can be operated only when the LPF switch on the rear panel is set to MANUAL.
- This switch is disabled when the LPF switch on the rear panel is set to AUTO. The switch is automatically enabled when DSD (SACD) playback starts.

⑥ Input Selector (INPUT)

The input source can be selected with this selector.

Note:

- When the input selector indicator 4 is lit red, AES/EBU is enabled. When the indicator 4 is lit blue, ZERO LINK is enabled.

⑦ NOS Indicator

When in NOS mode, the NOS indicator is lit green and when in FIR mode, the indicator is off.

⑧ SYNC Indicator

When in SYNC (DPLL OFF), the SYNC indicator is lit blue.

⑨ Invert Indicator

When in the inverted phase, the invert indicator is lit red.

⑩ LPF Indicator

When the analog low-path filter is on, the indicator is lit red.

Note:

- This feature is not available for the S-3 Reference model.

⑪ Input Selector Indicators

The input source selected is indicated.

⑫ Disc Tray

This is tray for compact disc. Put the disc on the tray with printed side up.

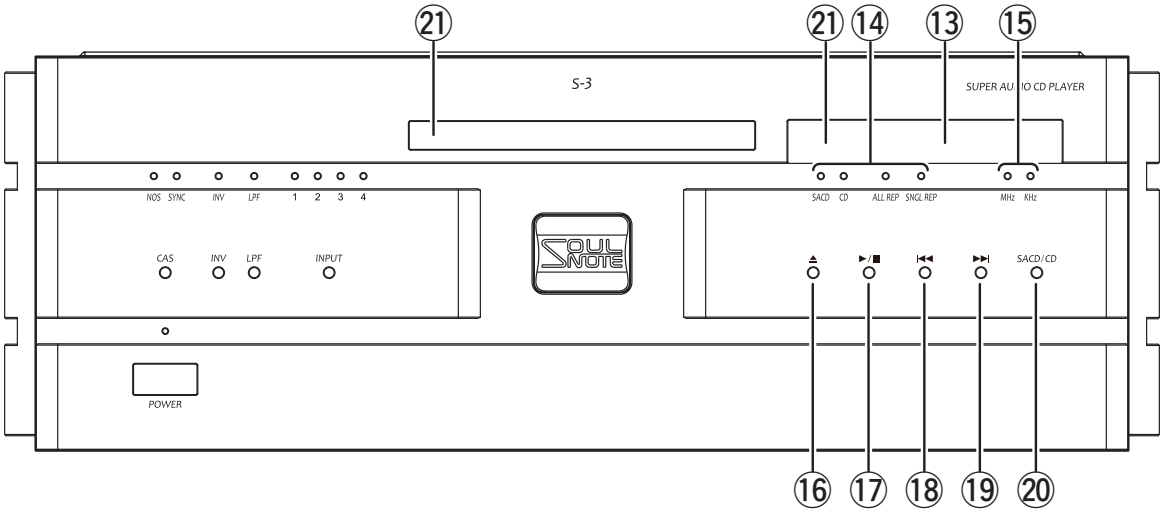

⑬ Display

■ When SACD or CD is used

The Track information and Time information will be showed on the display.

The detail of indication is described in page 13.

Notes:

- Even when the display is off, it turns on temporarily if an operation is performed.
- While “0” is flashing, none of the button and remote control operations are available.

■ When a source input from an external input terminal is selected

Sampling frequency of the input source will be displayed.

Note:

- During COAX input or AES/EBU input, sampling frequency will not be displayed.

⑭ Mode Indicators

These indicators light up to indicate the display status and playback mode.

SACD :
When SACD is selected, the indicator is lit blue.

CD :
When CD is selected, the indicator is lit red.

ALL REP. :
The indicator is lit in red when all tracks are to be played repeatedly.

SINGLE REP. :
The indicator is lit in red when a single track is to be played repeatedly.

⑮ Sampling Frequency Unit Indicators

The sampling frequency unit (MHz/kHz) is indicated.

⑯ Open/Close Button (⏏)

To press the Open/Close button, Compact Disc will be inserted or took out.

⑰ Playback / Stop Button (►/■)

Press to start playback. Press again to stop playback.

⑱ Track Jump Button (I◄◄)

Press during playback to jump to the beginning of the track currently being played back. Press again to jump to the beginning of the previous track.

⑲ Track Jump Button (►►I)

Press to skip to the beginning of the next track.

⑳ SACD / CD Toggle Button

Press to toggle between SACD and CD when a hybrid disc is used.

Note:

- If the power is turned on while this button is being pressed, the playback mode can be changed. The setting of this mode is retained until the same operation is performed again even if the power is turned off.
  Mode 1: Always reads the SACD layer first.
  Mode 2: Reads the layer played last time.

㉑ Remote Sensor

The remote sensor receives infrared signals from the remote control.

Rear Panel Names and Functions

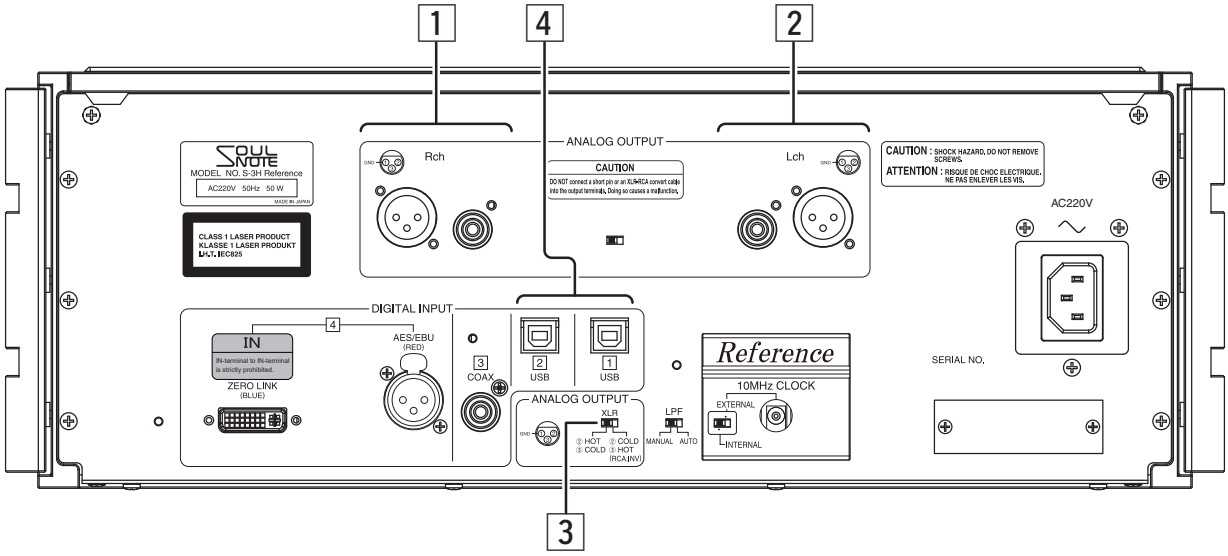

1 2 Analog Output Terminals (ANALOG OUTPUT)

The line input terminal of an amplifier is connected to one of these terminals. One terminal is an unbalanced output terminal (RCA terminal) and the other is a balanced output terminal (XLR terminal).

Note:

- DO NOT connect an XLR-RCA conversion cable or a short pin to any of the output terminals. Doing so could cause damage to this unit.

3 XLR Type Selection Switch (XLR)

The balanced output terminal type can be selected from the European type and USA type.

Euro type: pin 2 is HOT and pin 3 is COLD
USA style: pin 2 is COLD and pin 3 is HOT

Notes:

- The default setting of this equipment is the European type.
- When the USA type is selected, the RCA terminal output phase is reversed.

4 USB 2.0 Input Terminal (DIGITAL INPUT USB 1 2)

A computer, etc., can be connected to this terminal by using a USB 2.0 cable with a type-B connector (standard type). USB connection is achieved through a duplex communication between this equipment and a computer. Jamming or cutting the communication may result in serious error in the operating system of the computer. When a computer is connected via USB, do not perform the following operations.

- Repeatedly turning on and off the power of this equipment
- Repeatedly switching the input between USB and any other settings by using the input selector
- Repeatedly plugging and unplugging the USB cable
- Connecting via a USB hub

Notes:

- For a Windows computer, a designated driver is required. The driver can be downloaded from CSR, Inc. website.
- If an error occurs, the frequency display flashes. In this case, turn off the power of this equipment and then turn it on again.
- For connecting with a mobile device or a tablet PC, an OTG cable is required. There may be a case where an Android cell phone cannot be connected with this equipment.

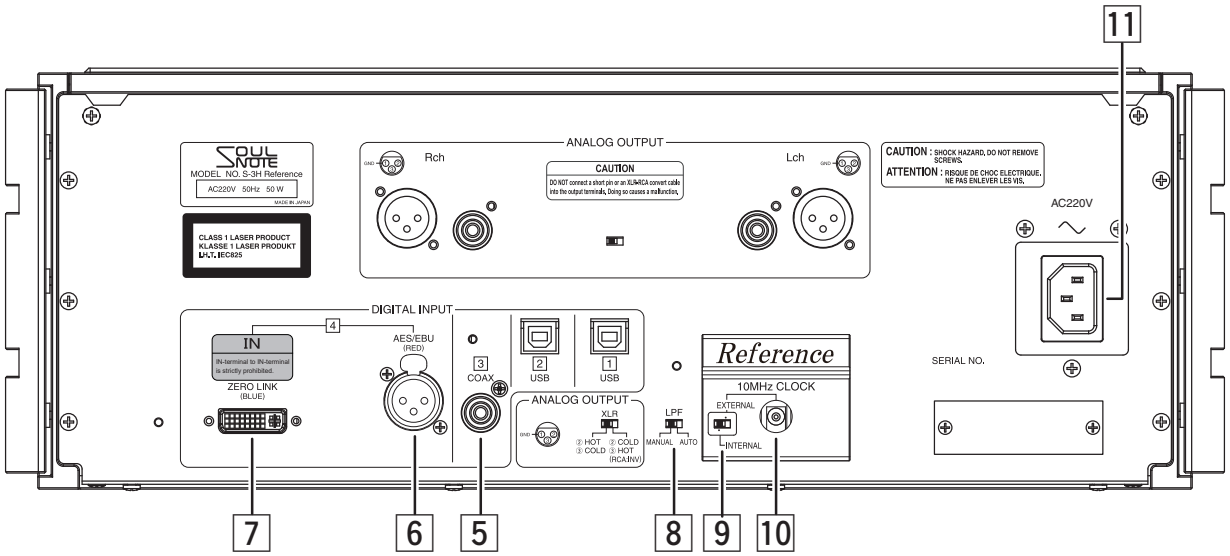

5 Coaxial Input Terminals (DIGITAL INPUT COAX 3)

External devices equipped with an S/PDIF format applicable digital output terminal can be connected to these terminals by using a 75-ohm coaxial digital cable.

6 AES/EBU(RED) Input Terminals (DIGITAL INPUT AES/EBU 4)

External devices equipped with an AES/EBU digital output terminal can be connected to these terminals by using an XLR digital cable.

7 ZERO LINK(BLUE) Input Terminals (DIGITAL INPUT ZERO LINK 4)

Devices equipped with a ZERO LINK output terminal can be connected to this terminal via a DVI cable.

Note:

- DO NOT connect devices such as a monitor to this terminal.

Cautions

- When connecting a cable to any of the input terminals or output terminals, make sure that the power of this equipment is off.
- When performing any rear panel switch operations, make sure that the power of this equipment is off.

8 LPF Switch

The analog LPF switch mode can be selected from the flowing options.

MANUAL:
Activates the low-path filter switch (LPF) on the front panel.

AUTO:
Automatically activates only when a DSD signal is input.

Note:

- This setting disables the low-path filter switch (LPF) on the front panel.

9 External Clock Selector Switch

The clock setting can be switched between the internal clock and external clock.

Note:

- When switching the clock setting, make sure that the power of this equipment is off.

10 External Clock Input Terminal (10MHz CLOCK)

Connect to a 10 MHz clock such as our product, X-3. Since this is an SMA jack, use a BNC female - SMA male conversion adapter (sold separately) when a general BNC cable is used.

Notes:

- When connecting a device, make sure that the power of this equipment is off.
- When connecting an SMA cable, plug the cable straight into the terminal. (Otherwise, the screw cannot be turned easily.)
- **Do not overtighten the screw.**

11 AC Inlet (AC220V)

Connect to a 220 V AC wall outlet (mains) with the supplied power cable.

Remote Control Button Names and Functions

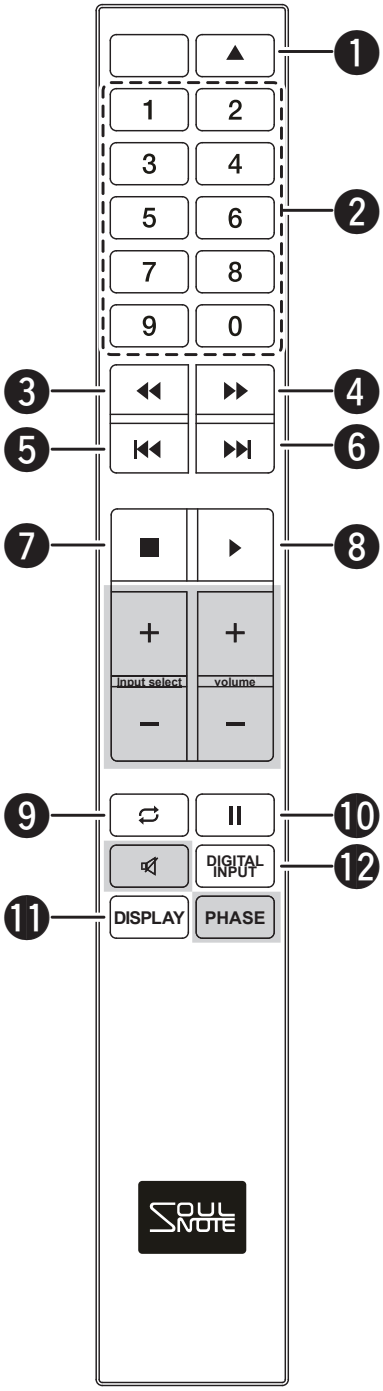

❶ Open/Close Button

Pressing this button, the disc tray will be opened or closed.

❷ Numeric Button (0 ~ 9)

These numeric buttons are used for track selection.

❸ Search Button (◄◄)

Pressing this button, playback will be rewound.

❹ Search Button (►►)

Pressing this button, playback will be fast-forward.

❺ Track Jump Button (|◄◄)

Pressing this button, playback will jump to beginning of current track. Pressing it again, it will jump to beginning of previous track.

❻ Track Jump Button (►►|)

Pressing this button, playback will jump to beginning of next track.

❼ Stop Button (■)

Pressing this button, playback will be stopped.

❽ Playback Button (►)

Pressing this button, playback will be started.

❾ Repeat All Button

Pressing this button, playback will become in Repeat All Mode. Pressing it again, the Repeat All Mode is canceled.

❿ Pause Button (II)

Pressing this button, playback will be paused. Pressing it again, the pause status will be canceled.

⓫ Display Button

Pressing this button toggles the display and indicators “ON” and “OFF”.

⓬ DIGITAL INPUT Button

Press this button to select the input source that is connected to DIGITAL INPUT.

Note:

The grayed out portions are notavailable on this device.

Operation

Operation	Main Unit	Remote Controller
Power ON	Press the Power Switch. (Front Panel ①)	Cannot be operated.
Insert Disc	Press the Open/Close button (Front Panel ⑯) to open the tray, then put a Disc on it. Press again to close the tray.	Press the Open/Close button (▲) to open the tray, then put a Disc on it. Press again to close the tray.
	"00" will flash on the display while reading TOC (Table of Contents). 00 0000 **Note:** While "0" is flashing, none of the button and remote control operations are available because the power of the mechanism is turning on.	
	Number of Tracks and Total Time will be indicated on the display. 20 6400	
Playback	Press playback (►) button.	Press playback (►) button.
	Playback track and elapsed time will be displayed. 04 0246	
Pause Playback	Cannot be operated.	Press Pause (❚❚) button.
	Current track number and elapsed time will flash. 04 0246	
Stop Playback	Press Stop (■) button.	Press Stop (■) button.
	The number of tracks and total time will be displayed. 20 6400	
Select Track	Press the Track Jump Buttons (I◄◄ ►►I).	Press the Track Jump Buttons (I◄◄ ►►I) or number buttons (0-9).
Fast Forward/Fast Rewind	Cannot be operated.	Press the Search Buttons during playback (◄◄ ►►).
Play All Tracks Repeatedly	Cannot be operated. While all tracks are being played repeatedly, the ALL REP. indicator is lit.	Press the ALL REP. Button (🔁) during playback. Press again to cancel the all-track repeat playback.
Take Out Disc	Press Open/Close button (Front Panel ⑯) to open the tray, and then take out the Disc.	Press Open/Close button (▲) to open the tray, and then take out the Disc.
	For the track display, "00" is lit and the time display turns off. 00 0000	
Power OFF	Press Power Switch. (Front Panel ①)	Cannot be operated.

Error Indication	If Disc cannot be read	The Repeat indicator will flash, Track number will be indicated “00” and Time indication will be disappeared. Please stop to use the Disc if this symptom has been occurred. In this situation, press the Open/Close button to open the tray and take out the Disc.
	If Disc cannot become to read during playback	The indication will be switched to that the Repeat indicator will flash, Track number will be indicated “00” and Time indication will be disappeared. Please stop to use the Disc if this symptom has been occurred. In this situation, press the Open/Close button to open the tray and take out the Disc.
	If no indicator other than the power indicator is lit	Even though the clock is switched to “external clock”, an external clock is not connected or the power of the external clock is off.

■ Caution

We designed this equipment by relentlessly pursuing higher audio quality. Specifically, one of the features of this product is full sync playback that uses a single master clock yet does not use a DAC chip DPLL. In other words, connection that is the same as ZERO LINK is realized inside S-3. For this reason, it may take some time to start up the SACD mechanism (0 flashing) and to read TOC (00 flashing). You may need to wait for 30 seconds or more in some cases. Also, it is extremely rare, but startup of the SACD mechanism may fail. When it happens, loss of sync may occur. In such a case, cycle the power of S-3.

An aluminum reference plate is attached because an SMA terminal is employed as a clock terminal. This plate protects the SMA terminal by covering the part of the terminal that is protruded from the rear panel. Because of this plate, the External Clock Selector Switch is less noticeable, but be sure to set this switch to External when connecting X-3 to this equipment. When X-3 is connected to this equipment, make sure that the cable is plugged all the way into the AC inlet of X-3. You may feel some resistance when plugging the cable all the way into the AC inlet.

The ZERO LINK terminal of this equipment is for input use only. Do not connect input terminals with each other. It will cause a failure of the equipment. We use color labels so that you can distinguish between INPUT and OUTPUT terminals easily: blue indicates INPUT and yellow indicates OUTPUT.

To get future firmware updates, download the software from our website and connect your Window PC to this equipment via USB.

Notes:

- To display the firmware version, turn on the power while pressing the LPF switch.
- To change the startup mode of the SACD mechanism, turn on the power while pressing the INPUT selector. If you experience SACD mechanism startup failures several times, this operation may reduce the frequency of the failure. Even after you turn off the power, this mode will be retained unless you perform the same operation again. This mode is indicated by a dot (decimal point) flashing on the firmware version display.

Remote Control

■ Notes on Operation

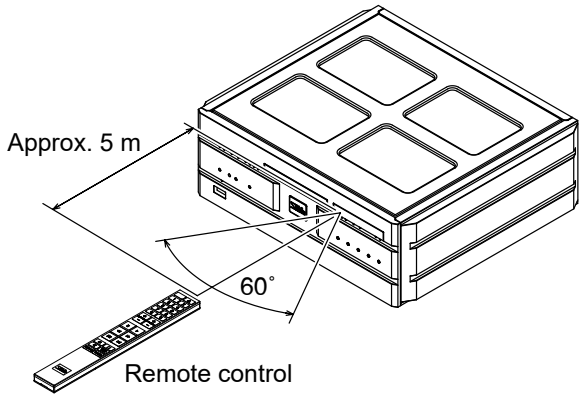

Operate the remote control within approx. 5 m distance from the front panel of the main unit within an angle of 60°to the remote sensor.

- Prevent the remote sensor from being exposed to strong light.
- Do not place any obstacles between the remote control and the remote sensor.
- Do not use other remote controls while using the remote control for the main unit.
- When using the remote control, keep the tip of the remote control facing the IR Sensor.

Cautions on Batteries

- Use CR2032 lithium batteries for the remote control.
- If you cannot operate the main unit by using the remote control at a short distance from the main unit, change the batteries with new ones.
- Do not use old and new batteries at the same time.
- Do not short-circuit, disassemble, or heat batteries. Do not throw batteries into a fire.
- Never leave batteries within reach of small children. If a battery is swallowed, immediately contact a doctor to seek medical attention.
- If your eyes come into contact with battery liquid, your eyes might get damaged. Avoid rubbing your eyes with and immediately flush your eyes with plenty of clean water such as tap water. After doing so, seek immediate medical attention.
- When not using the remote control for a long period of time, remove the batteries.

■ How to Change the Batteries

1. Remove the screw from the cover on the rear side of the remote control.

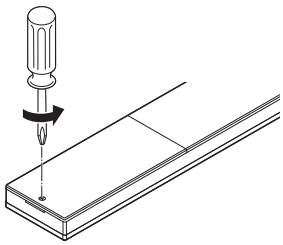

2. Lift up the cover diagonally to remove it.

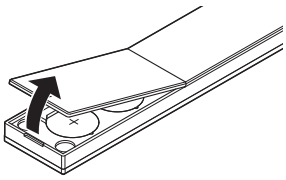

3. Use a thin yet sturdy oblong object to remove the batteries. Do not use any metal objects.

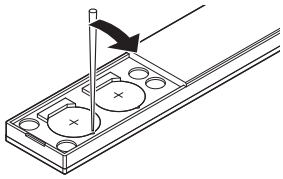

4. Insert the batteries with the + side facing upwards from the side indicated by the arrow.

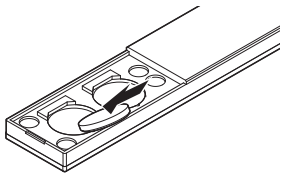

5. Insert the claw on the rear cover into the slit and then close the lid.

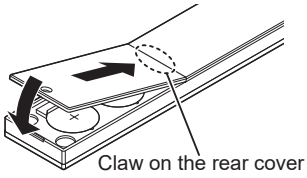

6. Use a driver to tighten the screw on the rear cover.

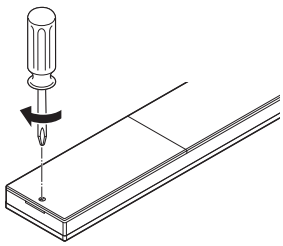

DISPLAY button

The display and indicators other than the power indicator can be turned off by pressing the DISPLAY button on the remote control.
Turning off the display can reduce noise inside the unit thereby improving the audio signal quality.

Balanced Input/Output

The XLR Connector is used for Balanced Input/Output. There are two types of connection, “European Type” and “USA Type”.

1. European Type (adapter for this unit)
(pin 2 = HOT, pin 3 = COLD)

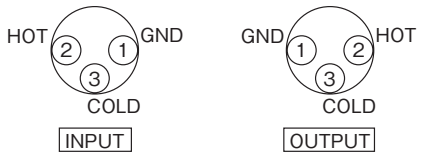

2. USA Type
(pin 2 = COLD, pin 3 = HOT)

On this equipment, use the XLR type selection switch (XLR) to select the desired type.

Attaching the Spike Pins

By replacing the feet with the supplied spike pins, you can tune the audio quality. Point grounding makes the sound focus and auditory lateralization sharper. Furthermore, the audio quality can be subtly tuned by changing the material of the surface on which this equipment is installed.

Note:

- When the spike pins are attached, it may be difficult to keep weight balance stable. Take great care not to carelessly apply a force on the corners of the main unit.

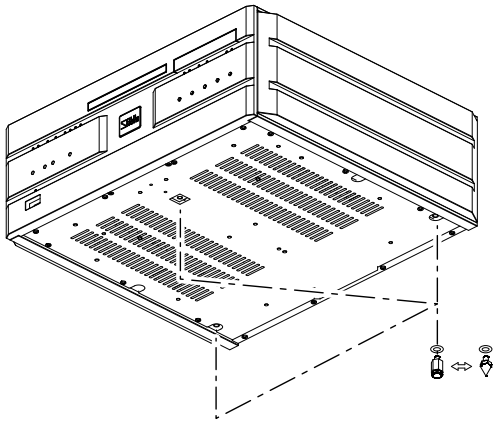

⚠ Cautions

- When using the spike pins, be extremely careful not to get injured, etc.
- When using the spike pins, be careful that the surface on which the main unit is installed such as the surface of a table, shelf, etc., may become damaged.Using the spike-receiving board is highly recommended in order to protect the installation surface.

Troubleshooting

No sound is output.

- Check that the power of this equipment is on.
- Check that the appropriate input source is selected with the input selector.
- Check the connections of the external devices.
- Check that the power of the external devices is on.
- Check that the operations and settings on the external devices are correct.
- Check that you are not attempting to input a signal that is not supported by this equipment.

A CD disc cannot be played properly.

- Check that you are not attempting to play a disc with scratches.
- Check that you are not attempting to play a non-standard compliant disc.
- Check that you are not attempting to play a CD-R or CD-RW disc on which tracks were recorded without using a CD standard for music.

The remote control does not operate.

- Check that the remote control batteries are not worn out.
- Check that the distance between the remote control and the main unit is not too far or that there is no obstacle between the remote control and the main unit.

This equipment cannot be recognized by the computer.

- Check the connection with the computer.
- Check that a USB hub is not being used.
- Check that the appropriate input source is selected with the input selector.

No sound is output from the computer.

- Check that the computer settings are properly configured.
- If suspension or hibernation has been used, sound might not be output after recovery. Turn off the power of this equipment and then turn it on again.
- If an error occurs on the computer while an audio file is being played back, sound might not be output. Turn off the power of this equipment and then turn it on again.

Maintenance

When the unit has become dirty, wipe it clean using a soft cloth. To remove stubborn stains, dilute some dish-washing liquid in 5 or 6 times as much water, soak a soft cloth in the solution, wring it out well, wipe away the stains, and then wipe the surfaces dry with a dry cloth.

Never use alcohol, paint thinners, benzine, insecticides or other volatile substances since they may mar or remove the surface gloss.

Bear in mind that rubbing surfaces with a chemical cleaning cloth or leaving such a cloth in contact with a surface for an extended time may result in deterioration.

Specifications

Analog Output
Balanced .....Output level 5.6 V
(Adapted Load Impedance 5 k Ohms or more)
Unbalanced .....Output level 2.8 V
(Adapted Load Impedance 5 k Ohms or more)
Analog Frequency characteristic
.....2 Hz to 150 kHz (+0/-1 dB)
S/N ratio ..... 110 dB
Total harmonic distortion 0.008%
Analog Filter ..... 1st oder passive type

Input format
USB ..... PCM, DSD (DoP v1.1, ASIO)
Coaxial, AES/EBU ..... PCM, DSD (DoP v1.1)
Supported sampling frequency
USB ..... Max. 768 kHz for PCM,
Max. 22.6 MHz for DSD
Coaxial, AES/EBU ..... Max. 192 kHz for PCM,
Max. 2.8 MHz for DSD64 DoP v1.1
Digital input..... 2 USB (Type B) inputs,
1 coaxial input (S/PDIF), 1 AES/EBU input
Analog output ..... 1 XLR output, 1 RCA output

Power voltage.....220 V AC , 50 Hz
Power consumption.....50 W
Maximum external dimensions
454 (W) x 170 (H) x 393 (D) mm
Weight ..... 27 kg

Allowable operating temperature range
.....+5 °C to +35 °C
Allowable operating humidity range
.....5 to 90 %
(when there is no moisture condensation)

SOULNOTE,Inc.

https://www.soulnote.link/

Printed in Japan

02/2024 23BA851352(H) TM