E-3MC E User Guide

Phono Equalizer Amplifier

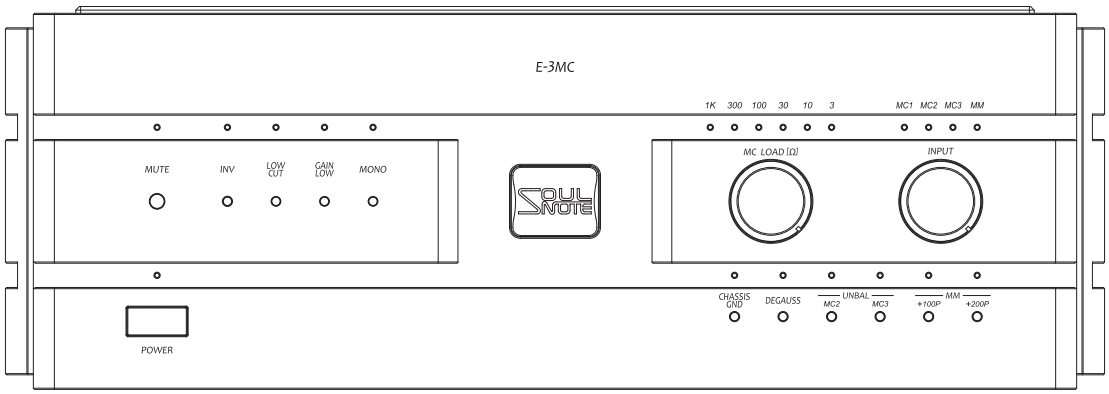

Table of Contents

Safety Precautions.....3
Front Panel Names and Functions.....6
Rear Panel Names and Functions.....8
Features of This Product.....9
Balanced Output.....10
Attaching the Spike Pins.....10
Protection Pads for Transport.....11
About Installation.....11
Troubleshooting.....12
Maintenance.....12
Specifications.....12

Supplied Accessories

- User Guide (this manual).....1
- Power cable.....1
- Spike-receiving board.....1
- Setting spacer.....3
- Spike pin.....3
- Hex key for spike pins.....1

Safety Precautions

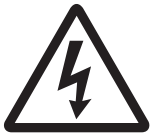

CAUTION

RISK OF ELECTRIC SHOCK
DO NOT OPEN

CAUTION: TO REDUCE THE RISK OF ELECTRIC SHOCK, DO NOT REMOVE COVER (OR BACK). NO USER-SERVICEABLE PARTS INSIDE. REFER SERVICING TO QUALIFIED SERVICE PERSONNEL.

The lightning flash with arrowhead symbol, within an equilateral triangle, is intended to alert the user to the presence of uninsulated "dangerous voltage" within the product's enclosure that may be of sufficient magnitude to constitute a risk of electric shock to persons.

The exclamation point within an equilateral triangle is intended to alert the user to the presence of important operating and maintenance (servicing) instructions in the literature accompanying the product.

WARNING

TO REDUCE THE RISK OF FIRE OR ELECTRIC SHOCK, DO NOT EXPOSE THIS APPLIANCE TO RAIN OR MOISTURE.

A warning that an apparatus with CLASS I construction shall be connected to a MAINS socket outlet with a protective earthing connection.

IMPORTANT SAFETY INSTRUCTIONS

READ BEFORE OPERATING EQUIPMENT

This product was designed and manufactured to meet strict quality and safety standards.
There are, however, some installation and operation precautions which you should be particularly aware of.

1. Read these instructions.
2. Keep these instructions.
3. Heed all warnings.
4. Follow all instructions.
5. Do not use this apparatus near water.
6. Clean only with dry cloth.
7. Do not block any ventilation openings.
   Install in accordance with the manufacturer's instructions.
8. Do not install near any heat sources such as radiators, heat registers, stoves, or other apparatus (including amplifiers) that produce heat.
9. Protect the power cord from being walked on or pinched particularly at plugs, convenience receptacles, and the point where they exit from the apparatus.
10. Only use attachments/accessories specified by the manufacturer.
11. Use only with the cart, stand, tripod, bracket, or table specified by the manufacturer, or sold with the apparatus. When a cart is used, use caution when moving the cart/apparatus combination to avoid injury from tip-over.

12. Unplug this apparatus during lightning storms or when unused for long periods of time.
13. Refer all servicing to qualified service personnel. Servicing is required when the apparatus has been damaged in any way, such as power-supply cord or plug is damaged, liquid has been spilled or objects have fallen into the apparatus, the apparatus has been exposed to rain or moisture, does not operate normally, or has been dropped.
14. Batteries shall not be exposed to excessive heat such as sunshine, fire or the like.

CAUTION:

- To completely disconnect this product from the mains, disconnect the plug from the wall socket outlet.
  The mains plug is used to completely interrupt the power supply to the unit and must be within easy access by the user.
- Never use the unit with any other cord except the supplied power cord.

NOTE ON USE

WARNINGS

- Avoid high temperatures.
  Allow for sufficient heat dispersion when installed in a rack.
- Handle the power cord carefully.
  Hold the plug when unplugging the cord.
- Keep the unit free from moisture, water, and dust.
- Unplug the power cord when not using the unit for long periods of time.
- Do not obstruct the ventilation holes.
- Do not let foreign objects into the unit.
- Do not let insecticides, benzene, and thinner come in contact with the unit.
- Never disassemble or modify the unit in any way.
- Ventilation should not be impeded by covering the ventilation openings with items, such as newspapers, tablecloths or curtains.
- Naked flame sources such as lighted candles should not be placed on the unit.
- Observe and follow local regulations regarding battery disposal.
- Do not expose the unit to dripping or splashing fluids.
- Do not place objects filled with liquids, such as vases, on the unit.
- Do not handle the mains cord with wet hands.
- When the switch is in the OFF position, the equipment is not completely switched off from MAINS.
- The equipment shall be installed near the power supply so that the power supply is easily accessible.

DECLARATION OF CONFORMITY
We declare under our sole responsibility that this product, to which this declaration relates, is in conformity with the following standards:
EN60065, EN55032, EN55020.
Following the provisions of Low Voltage Directive 2014/35/EU and EMC Directive 2014/30/EU.

A NOTE ABOUT RECYCLING:
This product's packaging materials are recyclable and can be reused. Please dispose of any materials in accordance with the local recycling regulations. When discarding the unit, comply with local rules or regulations.
Batteries should never be thrown away or incinerated but disposed of in accordance with the local regulations concerning battery disposal. This product and the supplied accessories, excluding the batteries, constitute the applicable product according to the WEEE directive.

CAUTIONS ON INSTALLATION

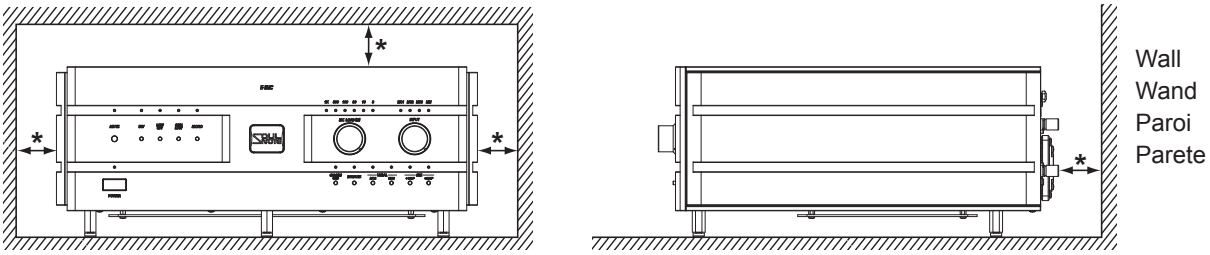

*** For proper heat dispersal, do not install this unit in a confined space, such as a bookcase or similar enclosure.**

- Leave sufficient clearance (at least 10 cm) from the wall, (at least 5 cm) from top surface of the unit.
- Do not place any other equipment on this unit.

Front Panel Names and Functions

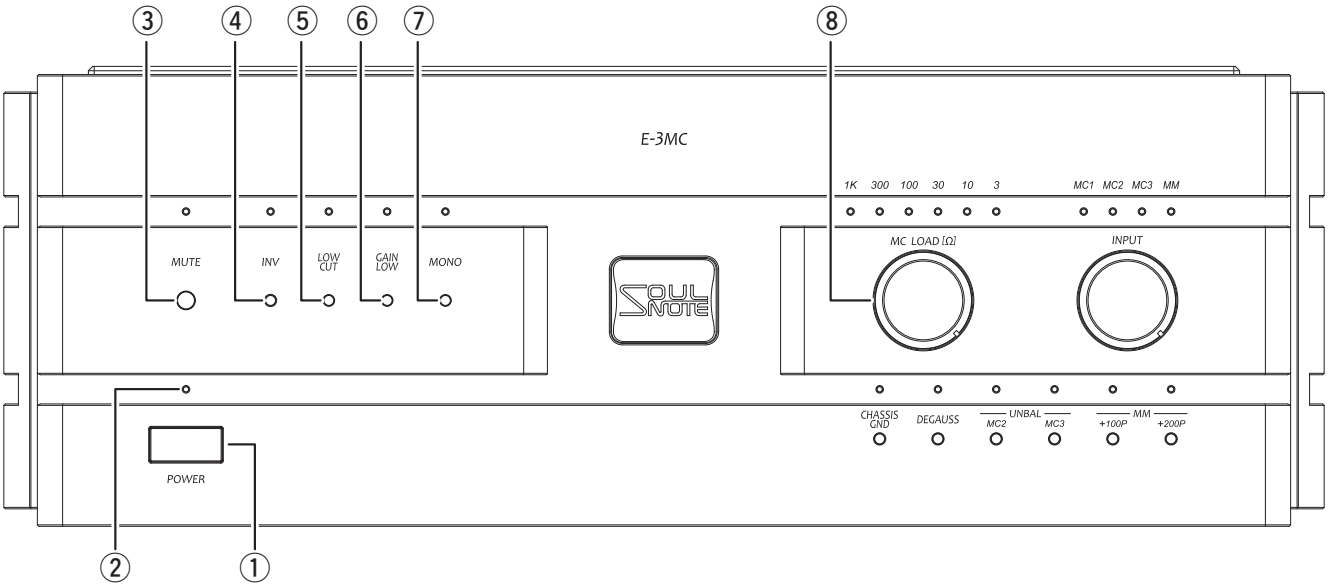

① Power Switch (POWER)

Press to turn on the power, and press again to turn off.

② Power Indicator (POWER)

The power is on, the indicator turns white.
The indicator is lit red when the chassis GND connection button (CHASSIS GND) is ON.

③ Mute Button (MUTE)

Press the button to mute the sound, and press the same button again to cancel the mute. While muted, the LED above the button is lit yellow.

④ Phase Inversion Button (INV)

Press the button to invert the output phase. Press the button again to cancel the phase inversion.
About 5 seconds is required for sound to be output after the button operation.

Note:

- The phase inversion LED is not lit during the 5-second period.

⑤ Low-cut Button (LOW CUT)

When this button is pressed, the LED lights up cutting out ultra-low range noise. Press again to cancel the setting. This function is intended to be used when the speaker woofer moves a lot due to, for example, curve of a record.

Note:

- About 5 seconds is required for sound to be output after the button operation.

⑥ Gain Low Button (GAIN LOW)

When this button is pressed, the LED lights up enabling you to lower the output level by 7dB. Press again to cancel the setting. This function is intended to be used when sound is distorted because input goes over the maximum allowable input level (headroom) of the connected preamplifier or other devices.

Note:

- About 5 seconds is required for sound to be output after the button operation.

⑦ Mono Audio Button (MONO)

When this button is pressed, the LED lights up. The right and left output channels are synthesized for a mono audio output. Press again to disable mono.

Note:

- About 5 seconds is required for sound to be output after the button operation.

⑧ MC Load Resistance Selector Dial (MC LOAD)

Select a load resistance suitable for the MC cartridge used. The dial operation is disabled when in the MM position is selected.

Note:

- About 5 seconds is required for sound to be output after the button operation.

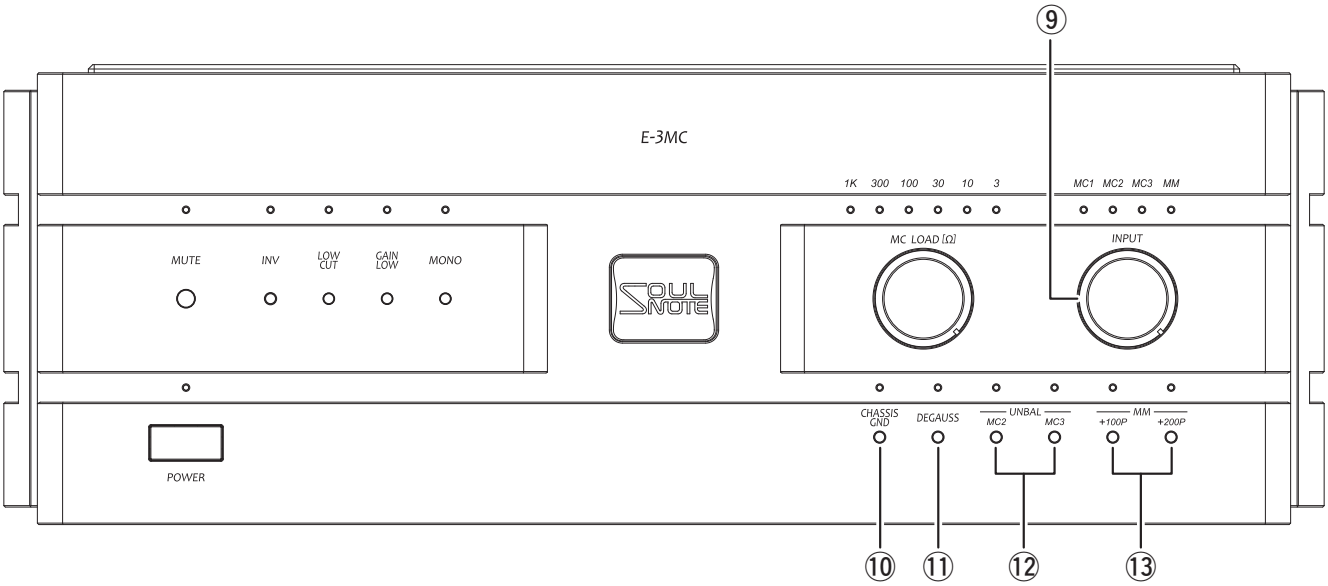

⑨ Input Selector Dial (INPUT)

Up to 4 record players (tonearms) can be connected to the unit. Use this dial to select the input.

MC1 : MC Balanced input
MC2/MC3 : MC inputs (Each of the MC2/MC3 inputs can be toggled between balanced and unbalanced.)
MM : MM unbalanced input

Note:

- About 5 seconds is required for sound to be output after the button operation.

⑩ Chassis GND Connection Button (CHASSIS GND)

Use this button to connect the left and right analog GNDs to the main chassis. The left and right analog GNDs are isolated from each other.

OFF: The LED is off. (The power LED is lit white.)
Each of the left and right analog GNDs are disconnected from the main chassis. Leaving the button in the OFF state during normal operation is recommended for higher quality audio.

ON : The LED is lit. (The power LED is lit red.)
The analog GND is connected to the main chassis. If you experience hum noises or other problems, try this setting.

⑪ Degauss Button (DEGAUSS)

When this button is pressed, the LED lights up short-circuiting input. Press again to cancel the setting. Playing a record with the input short-circuited for several seconds is beneficial because the cartridge can be degaussed. This can also work as a mute function when putting down the needle on a record.

⑫ Unbalance Switching Buttons (MC2/MC3)

Press these buttons to switch from the MC2/MC3 RCA balanced input to the unbalanced input, lighting up the corresponding LED.

⑬ MM Load Capacitance Switching Buttons (MM +100P/+200P)

Use these buttons when the input is set to MM.
You can select the load capacitance that provides the optimal match for your MM cartridge.
About 5 seconds is required for sound to be output after the button operation.

+100P: ON/+200P : OFF
The +100P LED is lit.
Load resistance 47 kohm, Load capacitance 100PF

+100P: OFF/+200P : ON
The +200P LED is lit.
Load resistance 47 kohm, Load capacitance 200PF

+100P: ON/+200P : ON
Both LEDs are lit.
Load resistance 47 kohm, Load capacitance 300PF

Notes:

- To adjust the load capacitance to the suitable load capacitance of the cartridge, add the phono cable capacitance. For example, if the suitable load capacitance of the cartridge is 400PF and the phono cable capacitance is 100PF, select the load capacitance 300PF.
- The phono cable capacitance is generally approx. 100PF.

Rear Panel Names and Functions

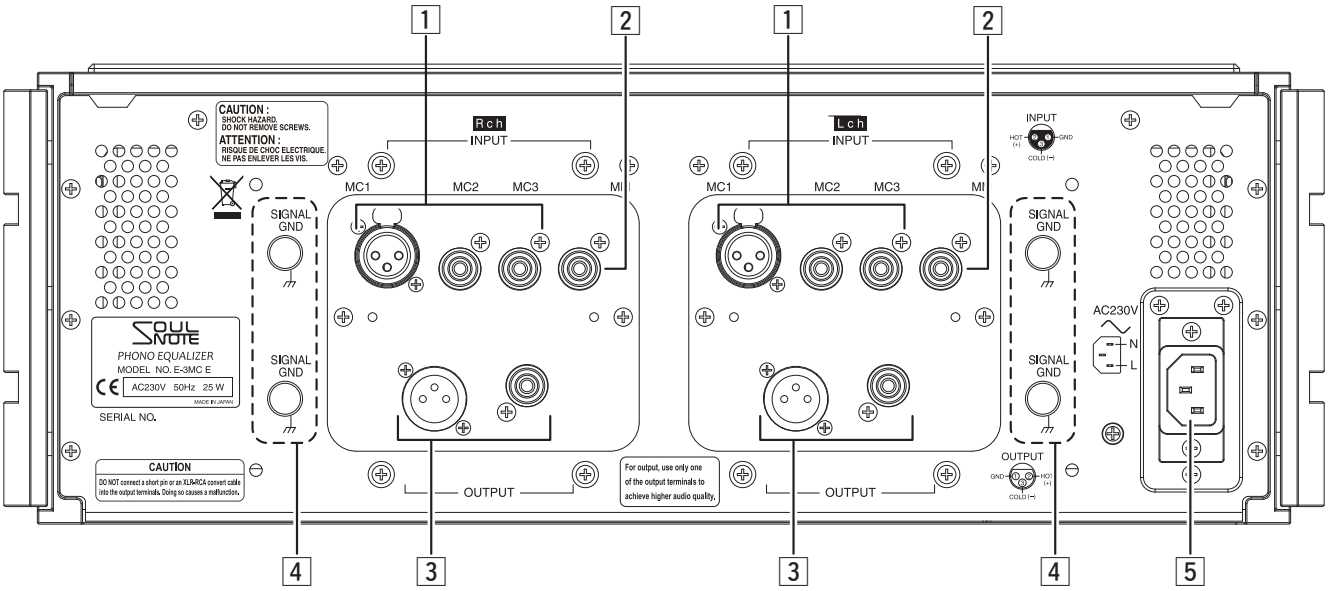

1 MC Input Terminals (INPUT)

These are MC input terminals.
MC1 is the XLR input and can be used only for the balanced input. MC2 and MC3 are the RCA inputs and can be used for either balanced input or unbalanced input.

Notes:

- You can toggle between the balanced input and the unbalanced input by using the ⑫ unbalance switching buttons.
- If you use the balanced input when using a RCA phono cable, the shield will be COLD depending on the phone cable you use. In such a case, be sure that the cable does not touch other cables such as the power cable. If problems such as hum noises still persist, use the unbalanced input.

2 MM Input Terminals (INPUT)

These are MM unbalanced input terminals.

3 Output Terminals

Connect these to the line input terminals of devices such as a preamplifier and pre-main amplifier.

Balanced output terminal
Connect an XLR cable to these terminals.

Unbalanced output terminal
Connect an RCA cable to these terminals.

Notes:

- For sound quality reasons, do not use balanced and unbalanced outputs at the same time. Also, even when not in use, merely connecting results in a capacitance load which can adversely affect the sound quality. Using balanced and unbalanced outputs at the same time will not cause a malfunction.
- Even when the input is balanced, unbalanced output is still possible, and likewise even when the input is unbalanced, balanced output is still possible. The unit internally consists of a balanced circuit, and therefore, balanced connections are recommended for higher quality audio.

4 Grounding Terminals (SIGNAL GND)

Connect the grounding wire of each record player to these terminals.

Note:

- No matter which terminal you use, the effect is the same.

5 AC Inlet (AC230V)

Connect to a 230 V AC wall outlet (mains) with the supplied power cable.

Notes:

- To maintain the audio quality, use the supplied power cable.
- Firmly insert the power cable into the end of the AC inlet.
- The AC inlet is not secured in order to obtain higher audio quality.

⚠ Cautions

- **Do not use any electrical contact cleaner or the like in the AC inlet area.**

Features of This Product

Feature 1: World's First Developed (*1) Phono Equalizer Featuring Fully Discrete Left and Right GNDs (*1 Based on our research)

The phone equalizer can completely isolate the 3 GNDs: the chassis, left and right channels. When combined with a SOULNOTE 3 series amplifier, it creates a fully discrete system in which the left and right GNDs remain completely separate from the cartridge to the speakers, without being connected at any point. As a result, this makes it possible to reproduce extraordinarily expansive sound fields.

*1 Depending on the specifications of the turntable or the arm, the left and right GNDs may need to be connected to the chassis. This operation can be performed by using the chassis GND connection button (CHASSIS GND) on the front panel.

Feature 2: Employs Newly Developed MC Type-R Circuit (*2)

The newly developed MC Type-R circuit, which was designed specifically for MC/MM playback, has been employed. It has a single-ended configuration where all operations are performed based on the GND, eliminating push-pull and bias circuits. The very simple non-NFB circuit preserves music signal purity with transient response. (The single-ended configuration is used for HOT and COLD, and serves as the balanced circuit.)

*2 Discrete high-gain non-NFB fully balanced ground-reference amplifier circuit

Feature 3: Super-Strong Power Supply with 3 Power Transformers

The power supply consists of the 3 transformers: the left and right large transformers dedicated to the MC Type-R circuit, and the transformer for the relay control power supply. Although the phono amplifier consumes only 25W, its power supply has a capacity comparable to that of a 500W power amplifier. This generous power reserve ensures unwavering music reproduction. The analog power transformer employs a newly developed toroidal power transformer with a copper short ring. By suppressing noise caused by leakage flux, this design enhances reproduction of the finest musical details.

Feature 4: High-speed non-NFB power supply

For the rectifying capacitor, a specially selected high withstand voltage small capacitance low magnification foil filter capacitor is used. To optimize the capacity, the number of units used was determined and the load on the power transformer was reduced. This further improved the real regulation of the ultra-powerful power transformer. For the rectifier diodes, SiC diodes of the latest specifications with enhanced allowable inrush current are used. This is the most powerful and high-speed power supply configuration ever considered. In addition, two large power relays with excellent sound quality are used independently and without fixing as power switches for the two main power transformer. In other words, the power switch on the front panel is dedicated to the control system sub-transformer. Independent power switch for each power transformer, which is a high current contact point, is very effective in terms of sound quality.

Feature 5: Unfixed structure

The amplifier block, terminals, AC inlet, top cover, and bottom cover are all unfixed.

Feature 6: RSR-2-12D (Reference SOULNOTE Relay)

An ultra low loss glass tube sealed reed relay that performs similar to a mercury relay as a base has been further customized. This is an original custom relay created by SOULNOTE that can reach sound quality levels comparable to that of wire. The E-3MC uses the RSR-2-12D for all relays through which audio signals pass.

Feature 7: Ultra high-quality naked foil resistors

We have applied artificial satellite grade ultra-high precision foil resistors with exceptional temperature properties and have made additional customizations with an emphasis on sound quality. These ultra-high sound quality resistors were developed in-house and employ a naked foil design to eliminate dumps with mold resin. The E-3MC uses ultra high-quality naked foil resistors for all resistors related to sound quality.

- For more detailed information, refer to our website or Facebook page.
  https://www.soulnote.link/

Balanced Output

The XLR Connector is used for Balanced Output. There are two types of connection, “European Type” and “USA Type”.

1. European Type (adapter for this unit)
(pin 2 = HOT, pin 3 = COLD)

2. USA Type
(pin 2 = COLD, pin 3 = HOT)

Attaching the Spike Pins

By replacing the feet with the supplied spike pins, you can tune the audio quality. Point grounding makes the sound focus and auditory lateralization sharper. Furthermore, the audio quality can be subtly tuned by changing the material of the surface on which this equipment is installed.

Notes:

- When replacing the feet with the spike pins, remove the carbon washers from the feet, and then reattach them to the spike pins.
- When the spike pins are attached, it may be difficult to keep weight balance stable. Take great care not to carelessly apply a force on the corners of the main unit.

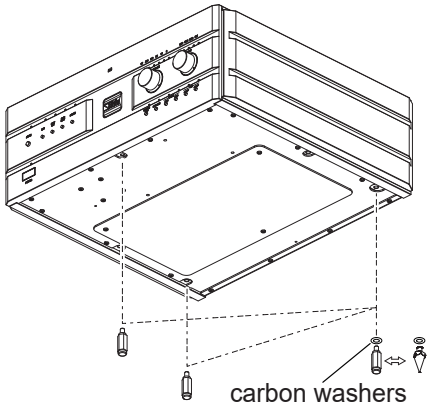

⚠ Cautions

- When using the spike pins, be extremely careful not to get injured, etc.
- When using the spike pins, be careful that the surface on which the main unit is installed such as the surface of a table, shelf, etc., may become damaged.Using the spike-receiving board is highly recommended in order to protect the installation surface.

Protection Pads for Transport

When unboxing this product, be sure to remove the transport cushions. With the cushions left attached, the intended sound quality of this product cannot be fully enjoyed.

- In order to obtain better sound quality, the top cover, the bottom cover, and the terminals on the rear panel are not secured.
- If you shake the unit, you will hear a rattling sound. It is not an abnormality.
- When you transport the unit, reattach the pads to the original places.

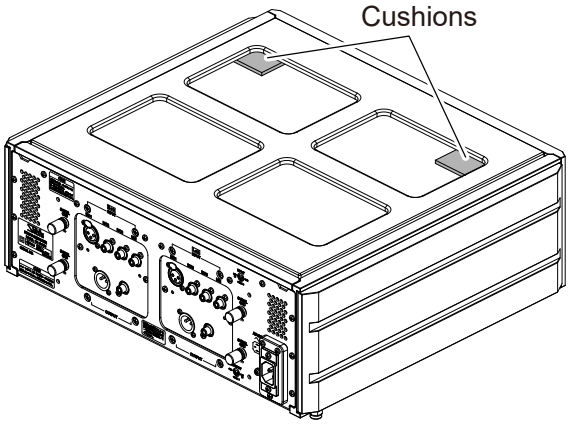

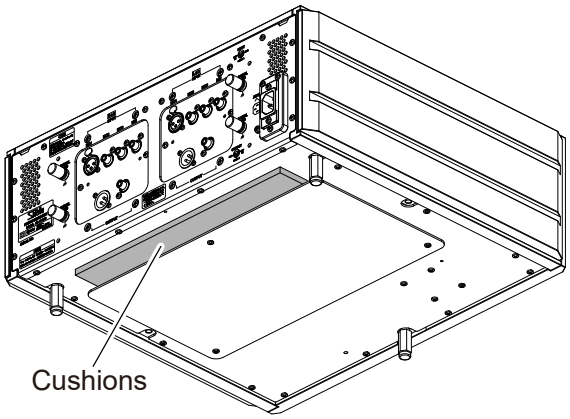

About Installation

When this product is installed on your shelf or audio rack with the spike pins attached, the supplied spike-receiving board can protect the installation surface from scratching.
Using the setting spacers along with the spike-receiving board ensures that there is space between the installation surface and the spike-receiving board. With that space, the air hole of the spike-receiving board can be utilized. This can further improve the sound quality.
The setting spacers can also be used alone as spike receivers.

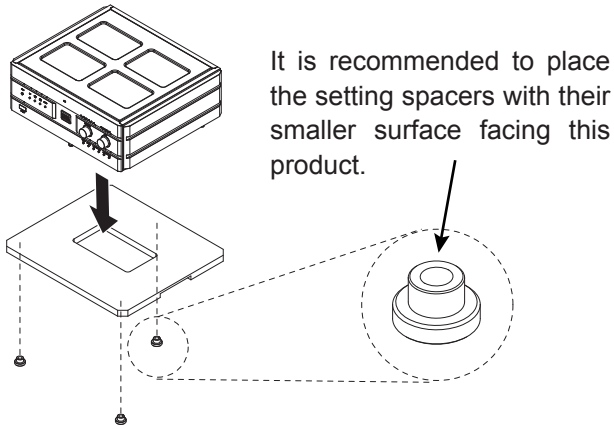

Troubleshooting

No sound is output.

- Check that the power of the main unit is on.
- Check the connections of the external devices.
- Check that the power of the external devices is on.
- Check that the operations and settings on the external devices are correct.
- Check the connections of the speaker system.

Maintenance

When the unit has become dirty, wipe it clean using a soft cloth. To remove stubborn stains, dilute some neutral dish-washing liquid in 5 or 6 times as much water, soak a soft cloth in the solution, wring it out well, wipe away the stains, and then wipe the surfaces dry with a dry cloth.
Never use alcohol, paint thinners, benzine, insecticides or other volatile substances since they may mar or remove the surface gloss.
Bear in mind that rubbing surfaces with a chemical cleaning cloth or leaving such a cloth in contact with a surface for an extended time may result in deterioration.

Specifications

Input (MC) ..... XLR x 1, RCA x 2
Input (MM) ..... RCA x 1
Output..... XLR x 1, RCA x 1
Input sensitivity..... MC: 0.4 mV, MM: 4mV
Gain.....MC: 72dB, MM: 52dB
Rated output
Balanced 2.8V
Unbalanced 1.4V
RIAA deviation.....±0.15dB
MC load resistance.....3, 10, 30, 100, 300, 1K ohm
MM load capacity .....100, 200, 300 P
MM load resistance .....47K ohm
Power voltage.....230V AC , 50Hz
Power consumption.....25W (J600065)
Maximum external dimensions
.....454 (W) x 189 (H) x 431 (D) mm
(including the feet)
Weight 26kg

IAD GmbH
Johann-Georg-Halske-str.11
41352 Korschenbroich

SOULNOTE,Inc.

https://www.soulnote.link/

Printed in Japan

08/2026 62BA851160 TM